PN7XSM3Ti

3MP 12x Motorized Zoom IR Outdoor Camera

3MP PoE Smart Focus

Features

- 3.0MP 1/2.8"Sony progressive scan CMOS image sensor
- 12x(5-60mm) Smart Focus
- Local lens control by OSD switch and Remote lens control on UI
- 60m IR Beam Distance
- Multi Streaming of H.264 and M-JPEG
- H.264 : 20fps/ 2048x1536, M-JPEC : 20fps/ QVGA
- H.264 : 30fps/ 1920x1080, M-JPEC : 30fps/ QVGA
- Integrated motion detection with pre- and post-alarm image/video buffering
- Event-Triggered FTP and email upload of still images and videos
- Full Duplex Two-Way Audio Support(Option)
- External microphone input & speaker output connector(Option)
- Digital PTZ
- UPnP supported
- 1 Port analog video loop-out port
- Supports CBR and VBR modes
- Supports 12VDC/ IEEE 802.3af PoE injectors, mid- and end-spans
- Integrated HTTP Web server supporting 50 simultaneous user connections
- HTTPS supported(Hyper Text Transfer Protocol Secured)
- Integrated E-Mail, FTP, DDNS and DHCP client
- Extensive CGI API for software integration and remote programming operations
- Window based IP installer and license-free 16 CH NVR software
- Cable managed bracket
- IP67 Weatherproof

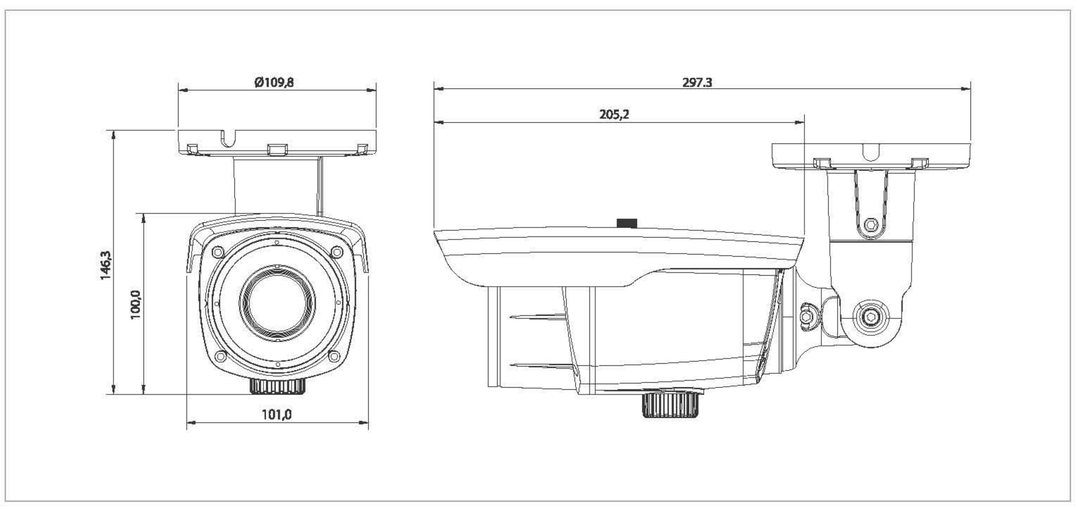

MODEL		PN7XSM3Ti
Classification		Specification
General	CPU	32-bit ARM9 RISC CPU up to 432MHz
	Video Buffer	128Mbyte
	Flash	128Mbyte
	SDRAM	256Mbyte
Image Pickup	Image sensor	3.0 Megapixel 1/2.8" SONY progressive scan CMOS image sensor
	Total Pixels	2144(H) x 1588(V) 3.4 Megapixel
	Effective Pixels	2096(H) x 1561(V) 3.27 Megapixel
	S/N Ratio	More than 50dB
	Min. Illumination	0Lux (IR On)
	IR Distance	60M
	Day & Night	ICR
	Lens Control	Smart Focus
	Lens	5~60mm Smart Focus
Video	Video compression	H.264 baseline profile, Motion JPEG
	Resolutions	Up to 2048 x 1536
	Frame rate	H.264 Up to 20fps with 2048x1536
		MJPEG Up to 30fps with 1080p resolution
	Video streaming	Support multi stream with H.264, MJPEG
		Adjustable frame rate
		VBR/CBR in H.264
	Pan/Tilt/Zoom	Digital PTZ
	Image setting	Day & Night
		Auto White Balance
		Auto Exposure
		Privacy Mask
		Effect - Color, Sharpness, Mirror/V-Flip, etc.
	Output	BNC x1, 1.0Vp-p, 75 ohm Composite Video, NTSC/PAL
Audio (Option)	Audio streaming	Two-way, full duplex
	Audio compression	G.711
	Sample Rate	8KHZ
	Data Rate	64Kbps
	Audio input	Microphone input /1 x Line-In (Mono)-Option
	Audio output	Line output/ 1 x Line-Out (Mono)-Option
Network	Security	Password protection
		User access log
		HTTPS encryption
	Supported protocol	HTTP, HTTPS, FTP, SMTP, UPnP, DNS, DynDNS, NTP, RTSP, RTP, TCP, UDP, ICMP, DHCP
System integration	Intelligent video	Motion detection up to 2048x1536 with 32x24 blocks
	Alarm trigger	Motion detection
		External input/Normal Open/Close Type
	Alarm events	File upload via ftp, e-mail
		Notification via email, FTP and TCP
	Video buffer	16MB pre-alarm and post-alarm
	Firmware upgrade	Remote upgrade via network
	API	CGI Interface document
		ActiveX Interface(ocx(dll) + document)
Physical	Power Source	DC 12V/1.5A, PoE(Power over Ethernet): 802.3af
	Power Consumption	Max. 6.6W, Max. 11.4W with IR On
	Net Weight	1500g (Camera Only)
	LED's	Power, Network Connection
	Dimension	101mm(W) X 108.7mm(H) X 297mm(D) including Bracket
Environment	Operating Temperature	-10 degree~50 degree Celsius (14F~122F)
	Storage Temperature	-20 degree~60 degree Celsius (-4F~140F)
Software	Included Software	NVR Lite (16 Channel), IP Installer (Windows only)
Package	Package Contents	Network Camera, Use Manual, External Power Adaptor, Software CD